MEIKE®

GF 85mm F1.8 SE II

自 动 对 焦 镜 头

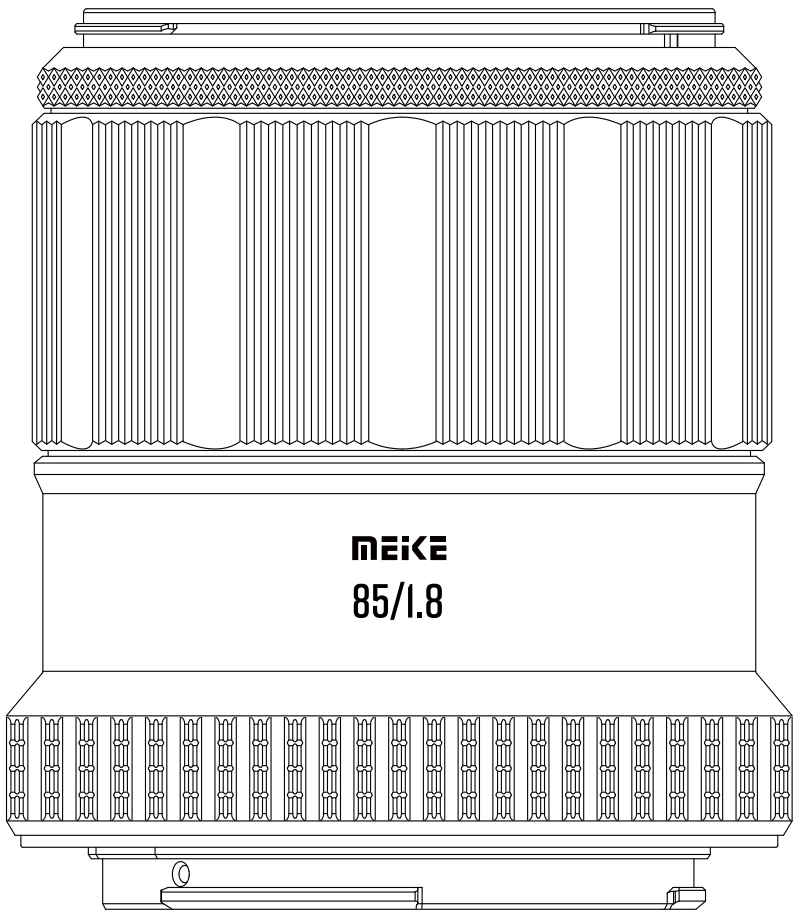

用户使用手册

USER MANUAL

生产商:成都威正数码科技有限公司 Tel:+86-755-82328117 ext837
地址:四川省成都市新都区工业东区创业路69号 Email:info@apex-ce.com www.mkgrip.com



美科 GF 85mm F1.8 STM 是一款经典的人像定焦镜头，适配各类日常拍摄场景，可拍出细节饱满、画质通透清晰的影像。这支镜头机身小巧紧凑，携带毫无负担，且全光圈下成像始终锐利稳定，出片质感出众。

全新升级的美科GF 85mm F1.8 STM重构优化光学结构，在保有F1.8超大光圈的基础上，延续了镜头小巧轻便的机身设计。镜头所有镜片双面均搭载多层复合镀膜，能有效压制画面眩光、消除鬼影，大幅提升光线透过率，精准还原画面原生色彩。同时镜头前后镜片额外加持防指纹、防油污涂层，不易积灰沾污，日常擦拭打理简单省心。

在使用本镜头前，详细阅读本说明书，使您对镜头更熟悉并正确掌握操作方法。

01 目录

目　　录 01
注意事项 02
部件名称 03
安装和拆卸 04
遮光罩使用 05
对焦开关与按钮 06
在线升级 07
镜头保养 08
产品规格 09
产品标配 10

简体中文

02 注意事项

- 请勿自行拆卸或修理镜头，触碰镜头内部可能导致镜头内部受损。
- 请不要让儿童接触到小型附件，防止吞咽，如无意中吞下，应立即就医。
- 请勿通过镜头观看太阳或明亮光源，可能会导致永久性视力损伤。
- 使用镜头时，请勿手拿遮光罩，以免镜头意外跌落。
- 严禁使用稀释剂或苯等活性试剂清洗镜头。
- 请勿将镜头放置于高温、炎热的地方，如阳光直射的汽车内;使用中的火炉旁等;这将会使部分零部件受损或变形。

MADE IN CHINA

03 部件名称

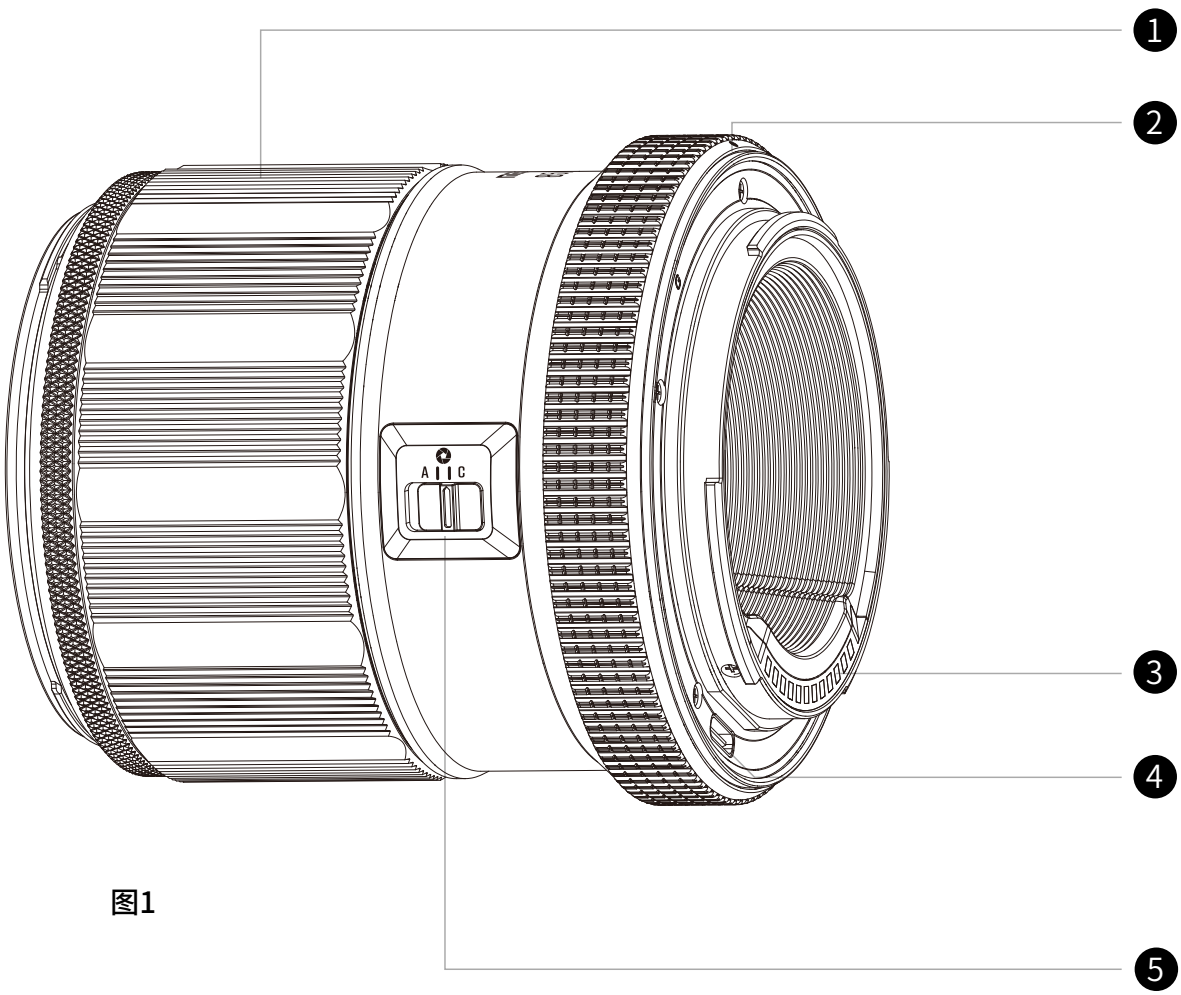

图1

❶ 对焦调节环

❷ 镜头安装对位标识

❸ 电子触点

❹ 固件升级端口（Type-c）

❺ 光圈模式档位开关
(等同于GF镜头光圈环上的C档和A档)

MADE IN CHINA

04 镜头安装和拆卸

镜头安装:将镜头上的安装标记对准相机上的安装标记,然后顺时针轻轻旋转,直到听到“咔哒”一声,表示镜头安装完成。**(如下图2)**

镜头拆卸:按下相机镜头释放按钮,然后将镜头逆时针轻轻旋转取出。**(如下图3)**

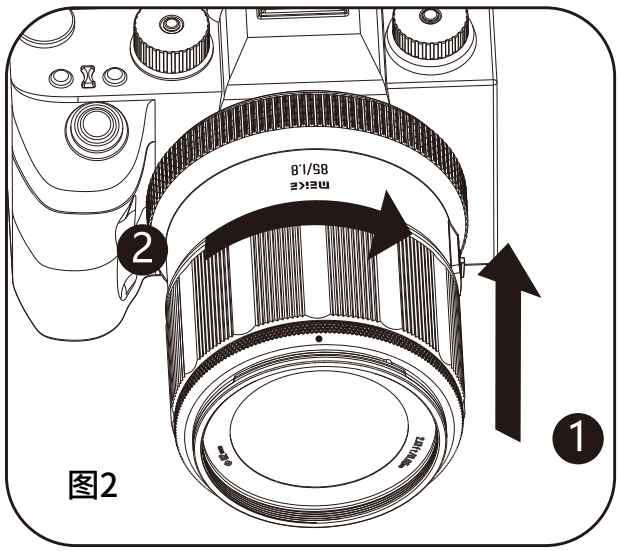

图2

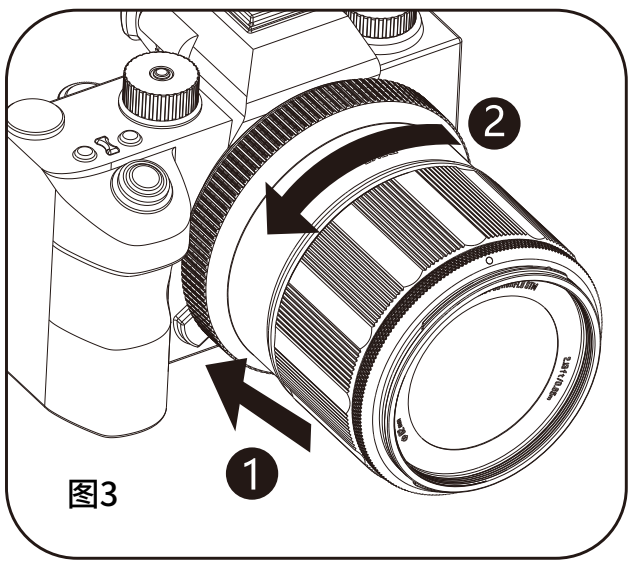

图3

·TIPS

卸下镜头后,请将镜头后端朝上放置,以避免划伤镜头表面和电子触点。

如果电子触点表面被弄脏,划伤或沾有指纹,可能会导致腐蚀或接触不良。相机和镜头可能无法正常工作,请用柔软的布将其擦净。

取下镜头时,需要安装上镜头盖,以免镜头沾上灰尘。

MADE IN CHINA

05 遮光罩使用

附配的遮光罩有效消除杂光和逆光的干扰，并能保护镜头，避免受到雨、雪、灰尘的干扰。

安装遮光罩

1.将遮光罩安装标识(●)对齐镜头遮光罩安装标识(●),装入镜头。

2.按（◂IN）,指示方向转动遮光罩，直至遮光罩锁定标识(●)，对齐镜头遮光罩安装标识(●)，并发出咔哒一声，遮光罩固定。**(图4)**

反向安装遮光罩

1.将遮光罩锁定标识(●)对齐镜头遮光罩安装标识(●)，装入镜头。

2.顺时针转动遮光罩90°，并发出咔哒一声，遮光罩固定。**(图5)**

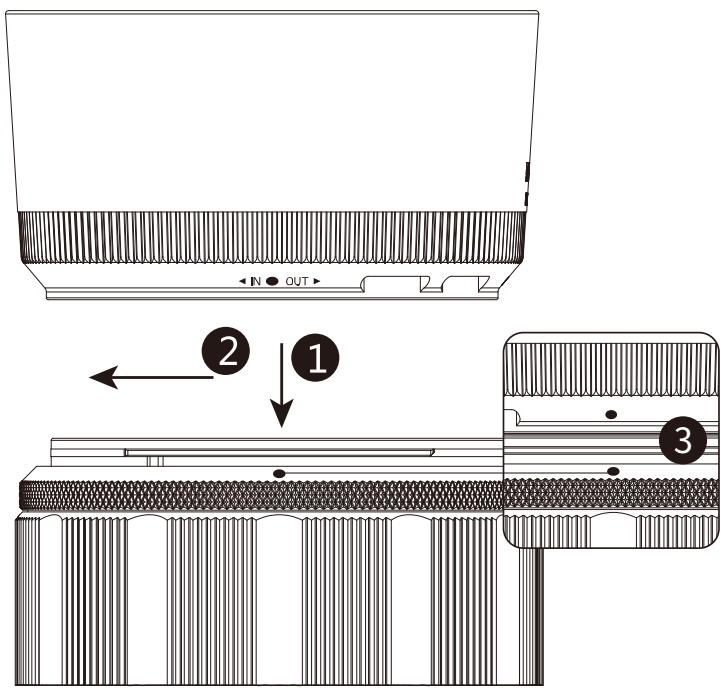

图4

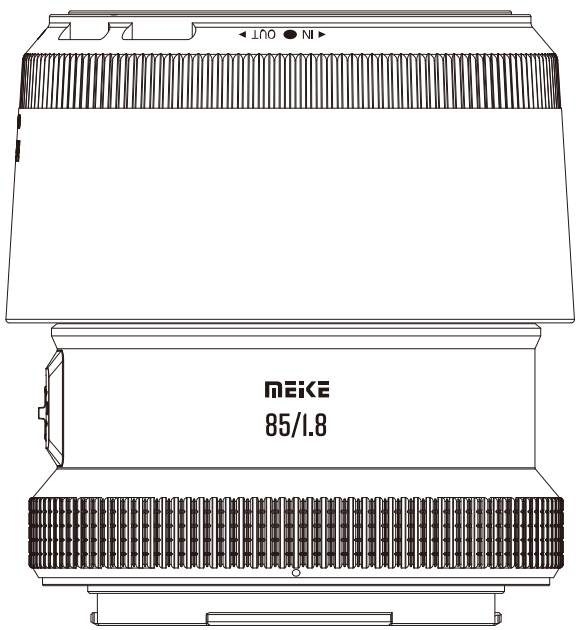

图5

·TIPS

1.如果遮光罩安装不当，可能会导致挡住部分图像。

2.安装或者拆卸遮光罩时，请握住遮光罩底部旋转，为防止遮光罩变形，不要抓住它的边缘部分旋转。

3.可以将遮光罩反向安装在镜头上，以便存放。

MADE IN CHINA

06 功能档位选择

部分富士GF相机，镜头光圈模式档位开关(图6)注意事项:

C档将光圈设为使用照相机指令拨盘所选的值。(光圈模式档位开关处于c档后，快门拨指令拨盘为A档时相机拍照模式为A，快门拨指令拨盘为其它档位时相机拍照模式为M)

A档将光圈设为照相机自动所选的值。(光圈模式档位开关处于A档后，快门拨指令拨盘为A档时相机拍照模式为P，快门拨指令拨盘为其它档位时相机拍照模式为S)

具体参考GF镜头使用说明书

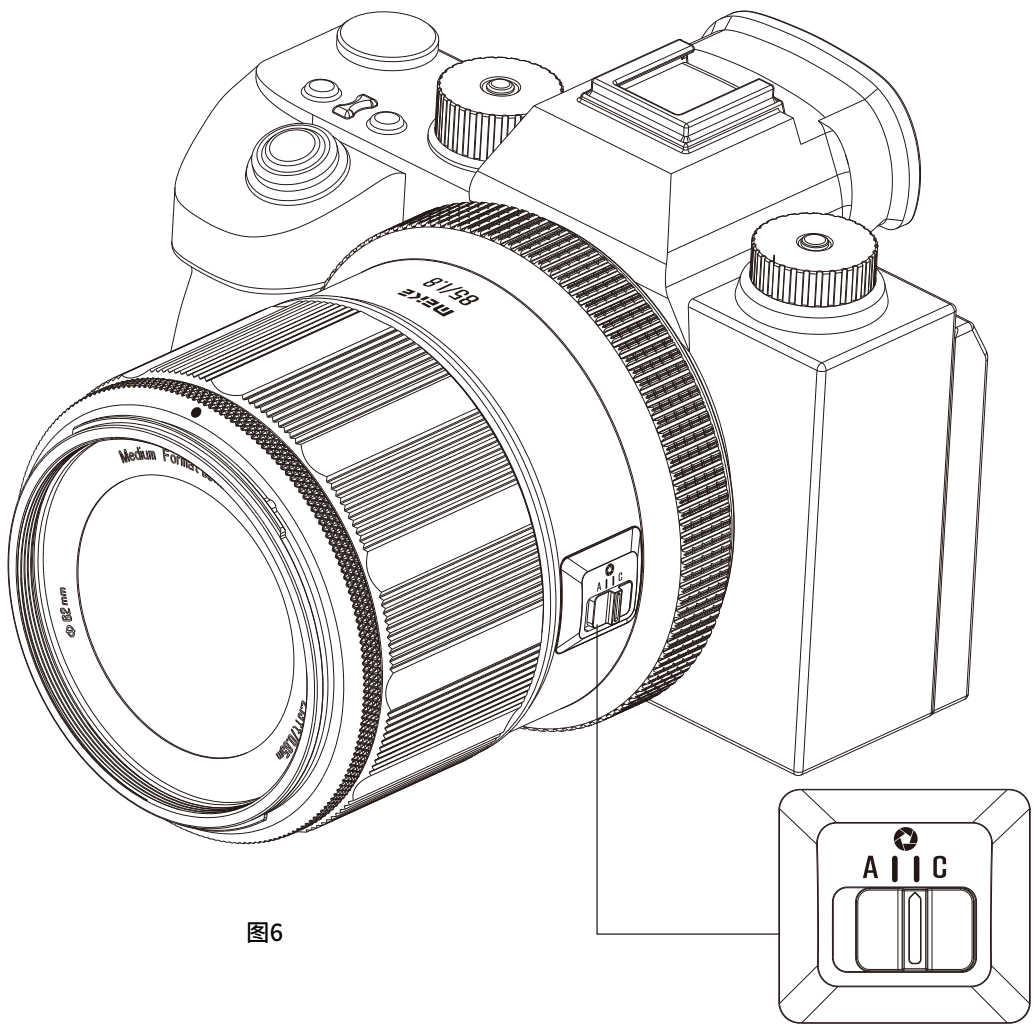

图6

MADE IN CHINA

07 在线升级

您可在官网www.mkgrip.com在线下载最新固件。

固件更新步骤:

- 在官网下载或向客服索要镜头最新升级固件。
- 将下载的升级固件压缩包解压,解压后的升级文件如下例示;

  例:“GF 85mm F1.8 STM SE II_*_***”
- 用Type-C USB数据线将镜头连接电脑,直到电脑上出现可移动磁盘。
- 将解压后升级文件复制到可移动磁盘里,此时升级等待约20秒左右,当复制的进度条完成后即完成升级。
- 可移动磁盘里面的“ver***.txt”文件,文件名中的***为镜头当前固件版本号。

08 镜头保养

- 避免接触镜头的镜片表面,当长时间不使用镜头,请将镜头存放在阴凉干燥的地方以防止发霉和生锈。也不可将樟脑丸、化学物质等一起存放。
- 镜头安装一个UV镜或专用前部保护镜,这种镜片除了能过滤紫外线以外,还能避免灰尘直接落在镜头表面,同时防止意外磕碰。
- 镜头表面有灰尘,可配合镜头笔和气吹清理镜头上的灰尘。
- 镜头上安装遮光罩,遮光罩不仅可以防止镜头在拍摄的时候带入太多的光线和紫外线,而且还可以保护镜头如果发生碰摔的情

MADE IN CHINA

况，保护镜头以至于不会受到太大的撞击。

- 镜头清洁纸或者镜头清洁布，蘸少许的乙醇或者镜头清洁剂，以圆周运动的方式，从中心到边缘进行清洁指纹和污渍。

- 镜头与相机的接口连接处不宜触碰，因灰尘、污垢或变脏均会造成镜头和相机的连接口故障。

- 本镜头未设计防水功能，下雨天或接近水源使用时需要防止镜头进水。镜头内部进水会导致电子元器件受损，可能无法维修。

- 当在温差骤变环境中使用您的摄影器材(相机与镜头)时，应在一段时间内把它暂存在盒内或塑料袋中，以便设备的温度能经历渐变的过程，这样可减少因温差而造成设备故障。

10 产品标配

镜头	x1	遮光罩	x1
前镜头盖	x1	后镜头盖	x1

MADE IN CHINA

MEIKE®

GF 85mm F1.8 SE II

Autofocus Lens

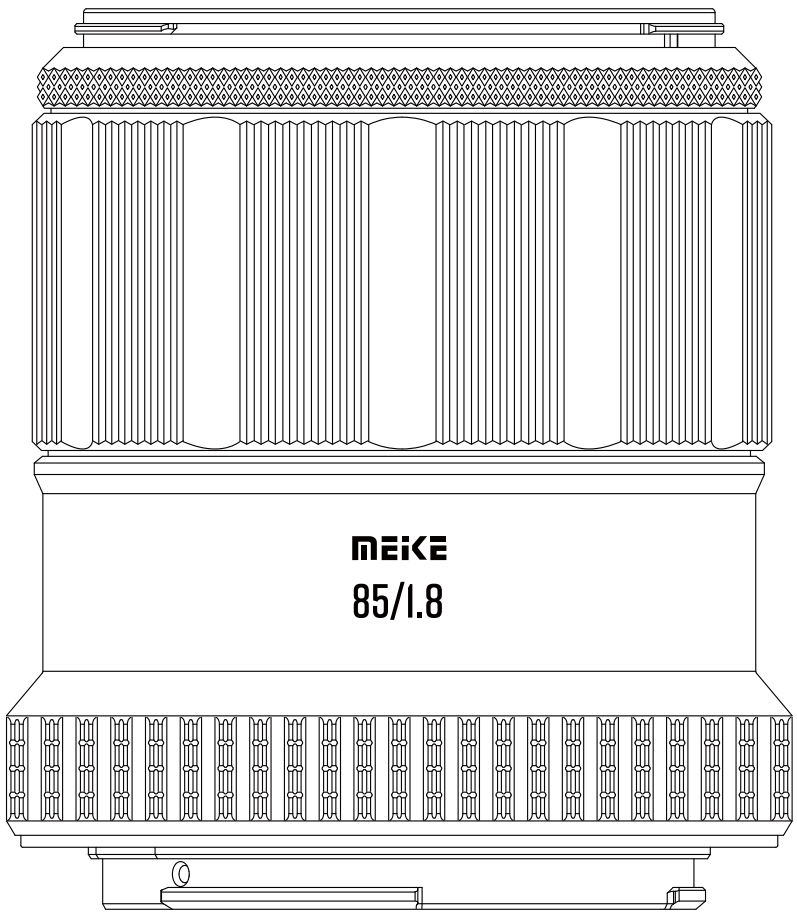

USER MANUAL

Chengdu Weizheng Digital Technology Co., Ltd
ADD : No. 69 Chuangye Road, Xindu District, Chengdu, Sichuan, China
Tel:+86-755-82328117
Email:info@apex-ce.com
www.mkgrip.com

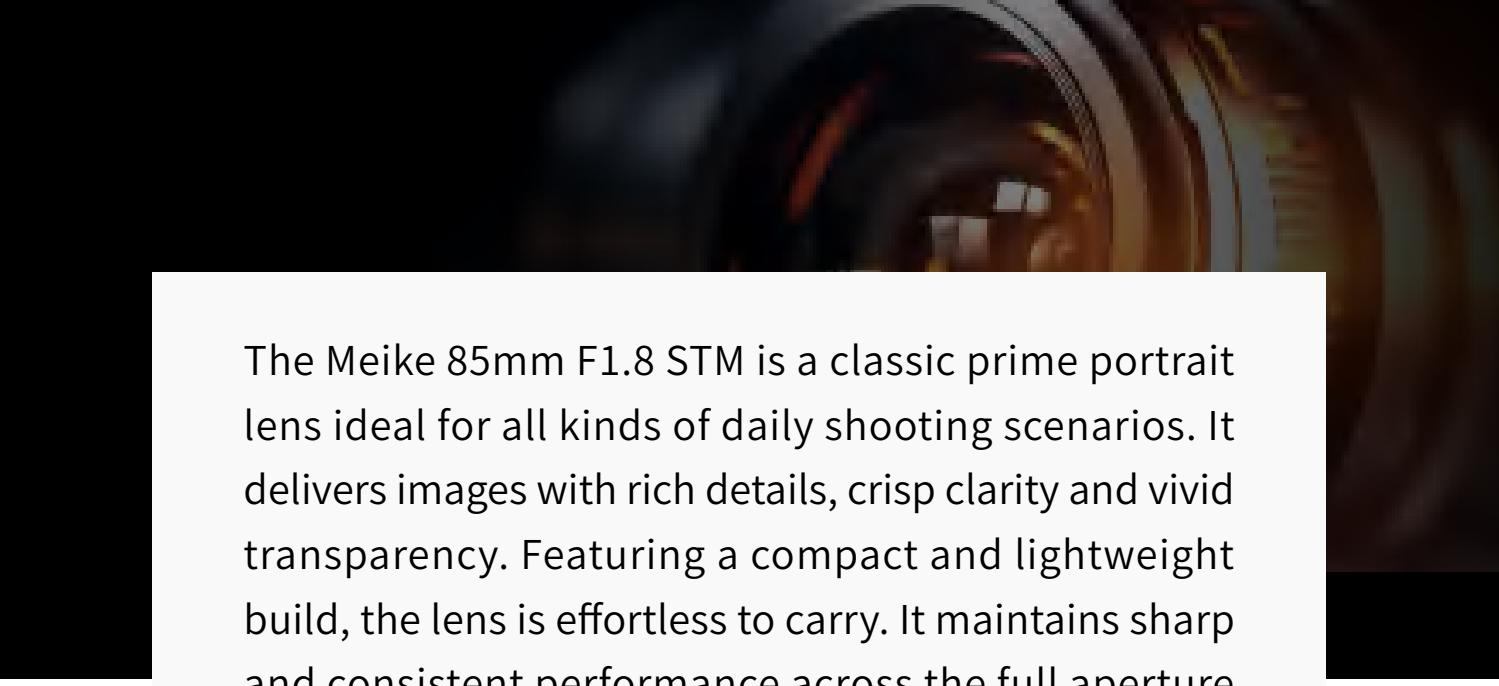

The Meike 85mm F1.8 STM is a classic prime portrait lens ideal for all kinds of daily shooting scenarios. It delivers images with rich details, crisp clarity and vivid transparency. Featuring a compact and lightweight build, the lens is effortless to carry. It maintains sharp and consistent performance across the full aperture range, producing outstanding image quality.

The newly upgraded Meike 85mm F1.8 STM comes with a reworked and optimized optical structure. While retaining the bright F1.8 large aperture, it keeps the lens compact and portable. All lens elements are coated with multi-layer composite coatings on both sides, which effectively suppress flare andghosting, greatly boost light transmittance, and reproduce authentic colors accurately. In addition, the front and rear lens elements are treated with anti-fingerprint and oil-repellent coatings, resisting dust and stains and making daily cleaning and maintenance simple.

Please read the instruction carefully to familiarize the proper ways to handle the lens before using. Please keep this instruction properly for your future reference.

01 TABLE OF CONTENTS

Table of Contents 01

Attention 02

Parts Names 03

Installation and Removal 04

Using the Lens Hood 05

Focus Switches and Buttons 06

Online Upgrade 07

Lens Maintenance 08

Product Specifications 09

Standard Accessories 10

02 ATTENTION

- Do not disassemble or repair the lens by yourself. Touching the insideof the lens may result in damage to the interior of the lens.
- Please keep the small accessories away from children to prevent swallowing.Seek medical care immediately if inadvertently swallowed.
- Do not watch the sun or bright light through the lens, which may lead to permanent visual impairment.
- When using the lens, do not hold the lens hood to avoid the accidental drop ofthe lens.
- Do not clean the lens with thinner, benzene or any other active reagents.
- Do not leave the lens in hot places, such as in a car with direct sunlight,which will damage or deform the plastic parts.

MADE IN CHINA

03 PART NAME

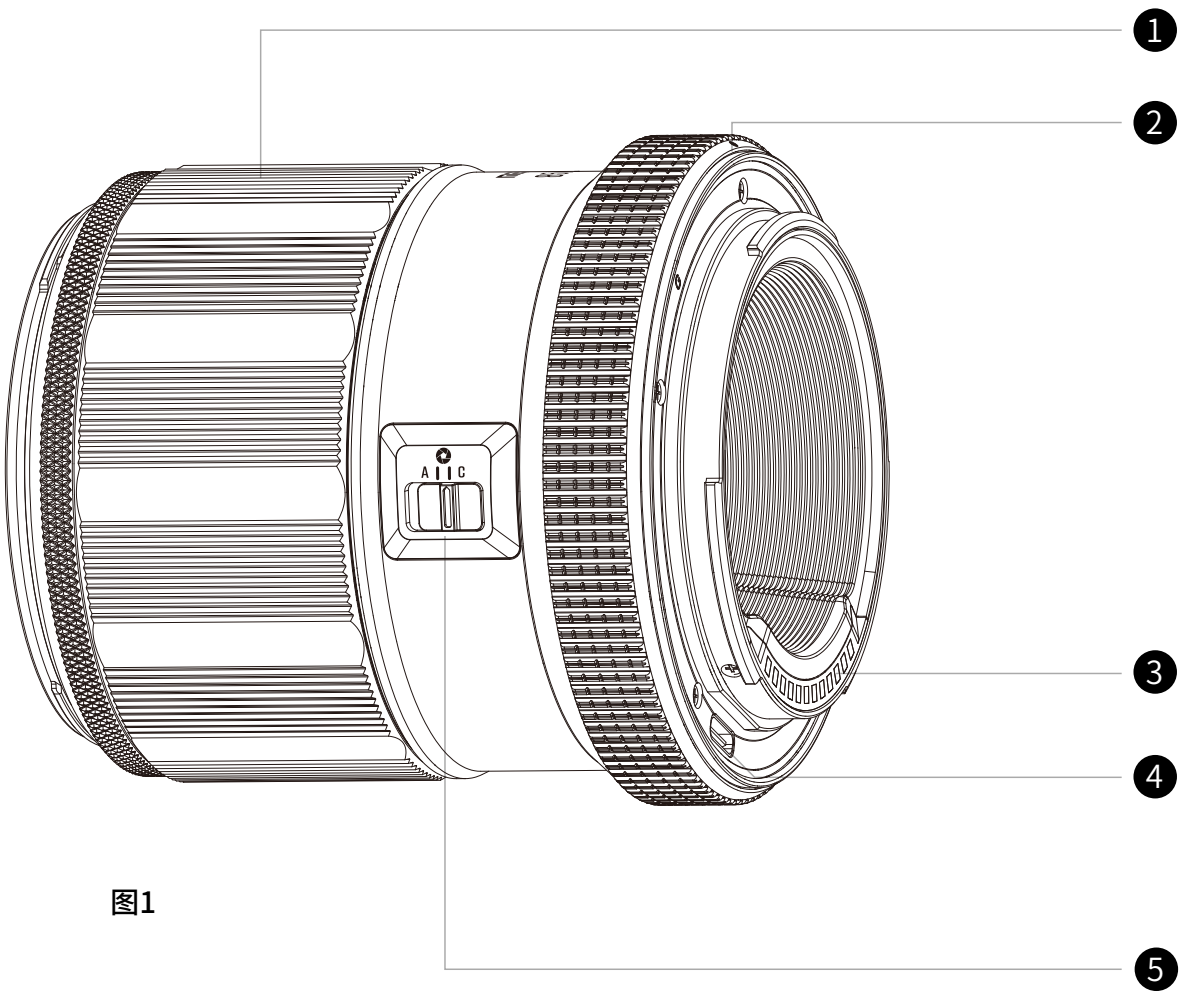

图1

❶ Focus Ring

❷ Align mark

❸ Electronic contacts

❹ Firmware upgrade port (Type-C)

❺ Aperture mode switch equivalent to the C and A positions on the GF lens aperture ring,

MADE IN CHINA

04 LENS INSTALLATION AND REMOVAL

Lens installation: Align the lens mounting mark on the lens with the lens mounting mark on the camera then rotate lightly, the installation would bedone after you hear the 'click' sound. (Fig. 2)

Lens disassembly: Press the release button on camera and then rotate the lens gently to remove it. (Fig. 3)

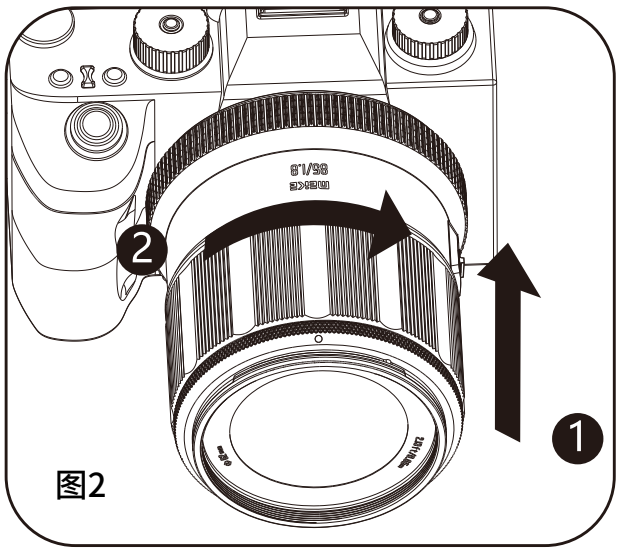

图2

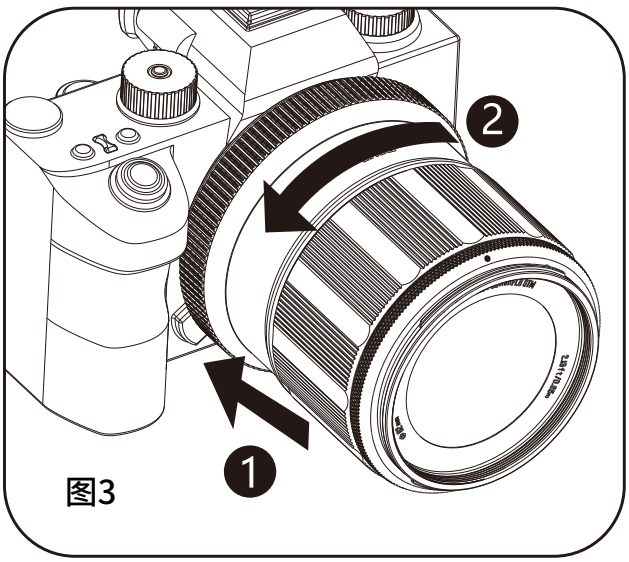

图3

·TIPS

After removing the lens, place the rear end of the lens facing upwards toavoid scratching the surface of the lens and electronic contacts.

If the surface of the electronic contact is stained, scratched or stained with fingerprints, it may cause corrosion or poor contact. The camera and the lens may not work properly, please wipe them with a soft cloth.

When the lens is removed, please install the lens cover in order to avoid dust on the lens.

ENGLISH

MADE IN CHINA

05 LENS HOOD INSTALLATION

Lens hood can reduce the influence of stray light and back light effectively, and prevent disturbance from rain, snow and ashes.

Lens hood installation:

1.Align the hood mounting mark and(●)lens hood mounting mark (●)load the lens.

2.Rotate the hood in the direction indicated by(◂IN) until the hood mounting marks match(●), align the lens hood mounting mark(●)the hood is fixed after a 'click'sound.(Fig. 4)

Install lens hood in the reverse direction:

1.Align the hood mounting mark and(●) lens hood mounting mark(●)load the lens.

2.Rotate the hood clockwise by 90°, the hood is fixed after a'click'sound.(Fig. 5)

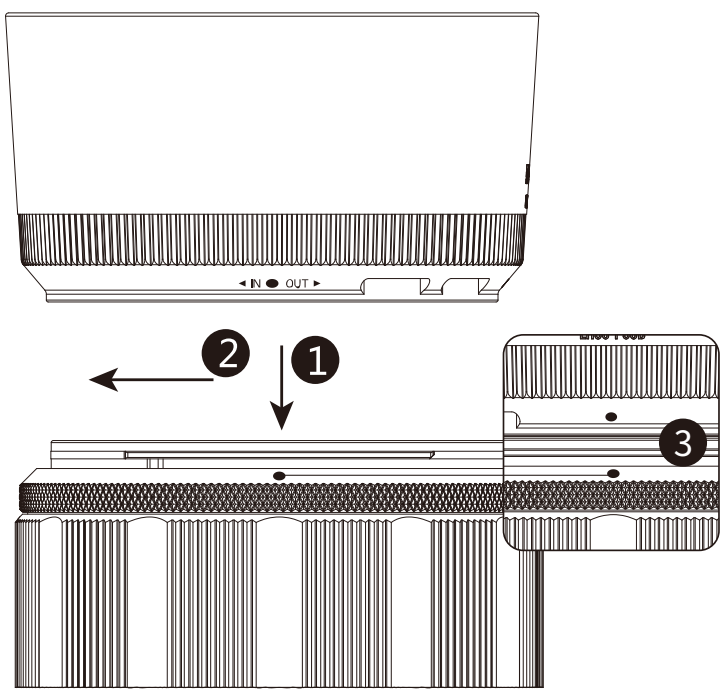

图4

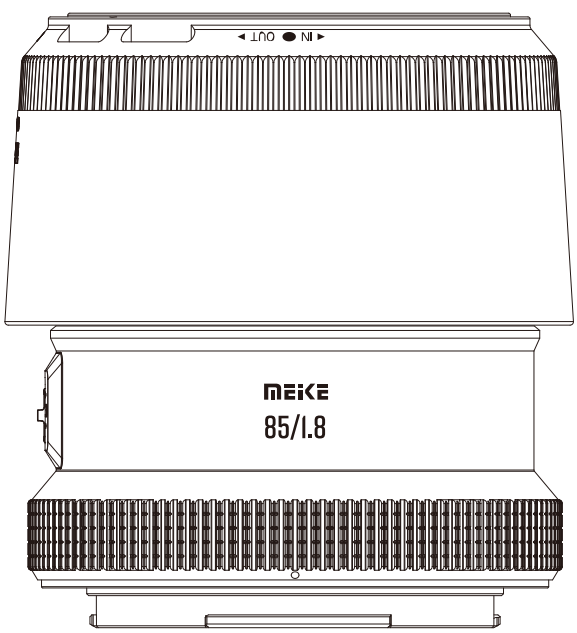

图5

·TIPS

- If the hood is installed improperly, part of the image may be blocked.
- When installing or disassembling the hood, please hold the bottom of the hood and rotate, do not hold the edge part of it to prevent deforming.
- The hood can be mounted reversely on the lens for keeping.

06 AF/MF FOCUS MODE SWITCH AND CUSTOM BUTTON

Notes on the Aperture Mode Switch (Figure 5) for Select Fujifilm GF Lenses:

C position: Sets the aperture to the value selected via the camera's command dial. (When the aperture mode switch is set to C and the shutter speed command dial is set to A, the camera' s exposure mode is A; when the shutter speed command dial is set to any other position, the camera' s exposure mode is M.)

A position: Sets the aperture to a value automatically selected by the camera. (When the aperture mode switch is set to A and the shutter speed command dial is set to A, the camera's exposure mode is P;when the shutter speed command dial is set to any other position, the camera's exposure mode is S.)

For details, refer to the manual provided with the GF lens.

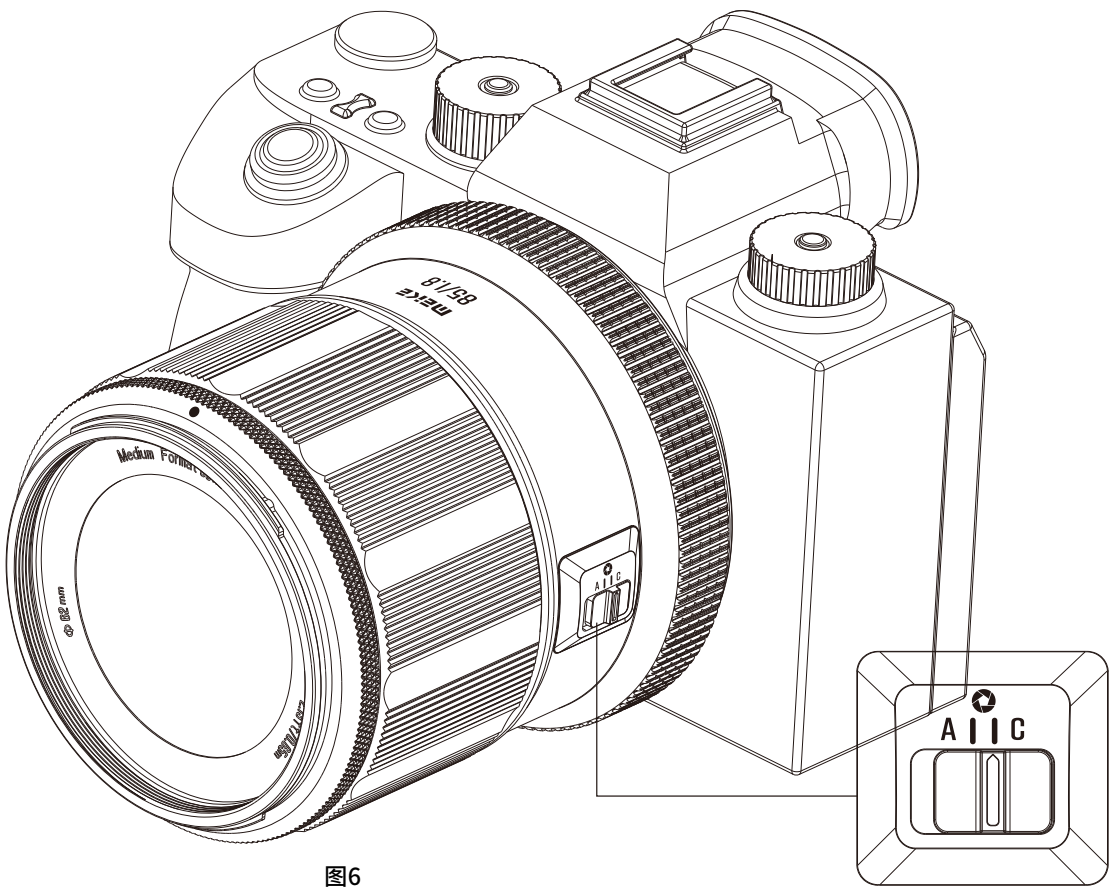

图6

MADE IN CHINA

07 FIRMWARE UPDATE

You man download the latest firmware online from the official website:www.mkgrip.com

Firmware update steps:

1. Download the latest lens upgrade firmware from the official website or request it from customer service.

2. Extract the downloaded firmware zip package. The extracted upgrade file will be named as shown in the example below:

Example: "GF 85mm F1.8 STM SE II_*_***"

3. Connect the lens to your computer via a Type-C USB cable until a removable disk appears on your PC.

4. Copy the latest firmware file into the removable disk. The upgrade process takes approximately 20 seconds.The upgrade is complete once the file copy progress bar finishes.

5. Locate the file named "ver***.txt" inside the removable disk. The *** in the filename represents the current firmware version number of the lens.

08 LENS CARE AND STORAGE

- Do not touch the surface of the lens. When the lens is idle for a long time,keep the lens in a cool and dry place to prevent mildew and rust. Do not store the lens with mothballs or chemicals together.
- The lens is equipped with a UV lens or a dedicated front protection lens that can filter UV light, prevent dust from falling directly on the surface of the lens, and prevent accidental bumps.
- When there is dust on the lens, you can blow the dust off with the help of lens pen.
- The lens is mounted with hood, which not only can prevent the lens

from introducing too much light and UV light when shooting, but also can protect the lens from serious damage when falling.

- Dip Lens-cleaning paper or lens cloth in a few alcohols or lens cleaner,and wipe circularly from the center to the edge to clean the fingerprints and stains.
- The interfaces of lens and the camera should not be touched, becausedust, dirt or stain will cause bad connection of the camera and the lens.
- The lens is not waterproof, please be careful on rainy days or prevent water from entering it when near to water. Electronic components may be damaged and may not be able to be repaired if water penetrates.
- When using the photographic equipment (camera and lens) in a suddentemperature change environment, please store the photographic equipment in a box or plastic bag for a period of time, so that the temperature of the equipment can undergo a gradual change, thereby reducing the possible functional failure caused by the temperature difference.

10 PACKAGE CONTENTS

Lens	x1	Lens hood	x1
Front lens cap	x1	Rear lens cap	x1

RoHS

Made in China

MADE IN CHINA